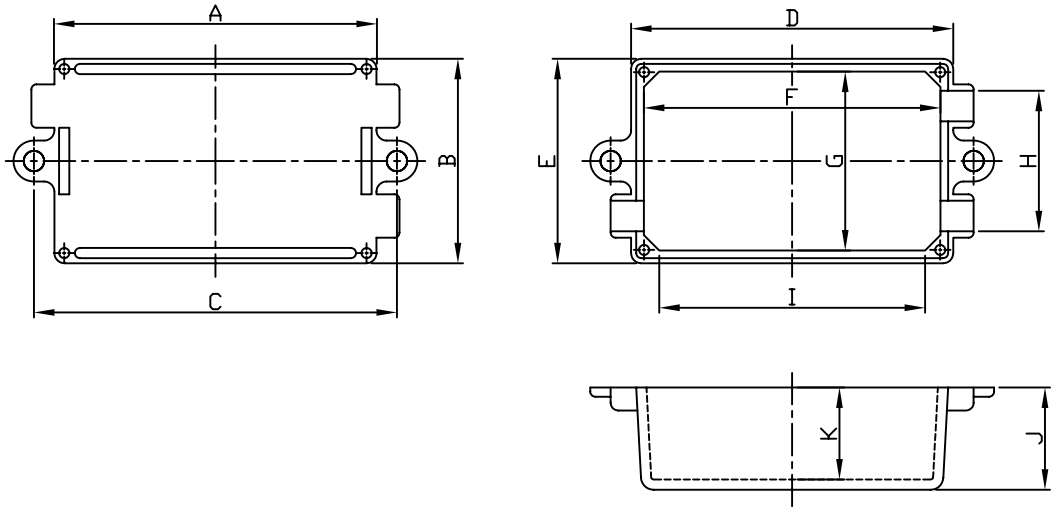

PART NO.	A	B	C	D	E	F	G	H	I	J	K
G1011	65.0	38.0	72.6	65.0	38.0	60.5	33.5	25.4	52.5	20.0	18.2
G1013	65.0	38.0	72.6	65.0	38.0	60.5	33.5	25.4	52.5	25.0	23.2
G1015	72.0	44.0	80.0	72.0	44.0	67.5	39.5	31.3	59.0	20.0	18.2
G1017	72.0	44.0	80.0	72.0	44.0	67.5	39.5	31.3	59.0	25.0	23.2

宣又實業有限公司 GAINTA INDUSTRIES LTD.	設計 DES'D BY	繪圖 DRA'D BY	核圖 CHK'D BY	比例 SCALE	日期 DATE	材質 MATE.	圖名 TITLE: G1011-G1017	圖號 DWG NO.:	圖號 REVISID	說明 DESCRIPTION